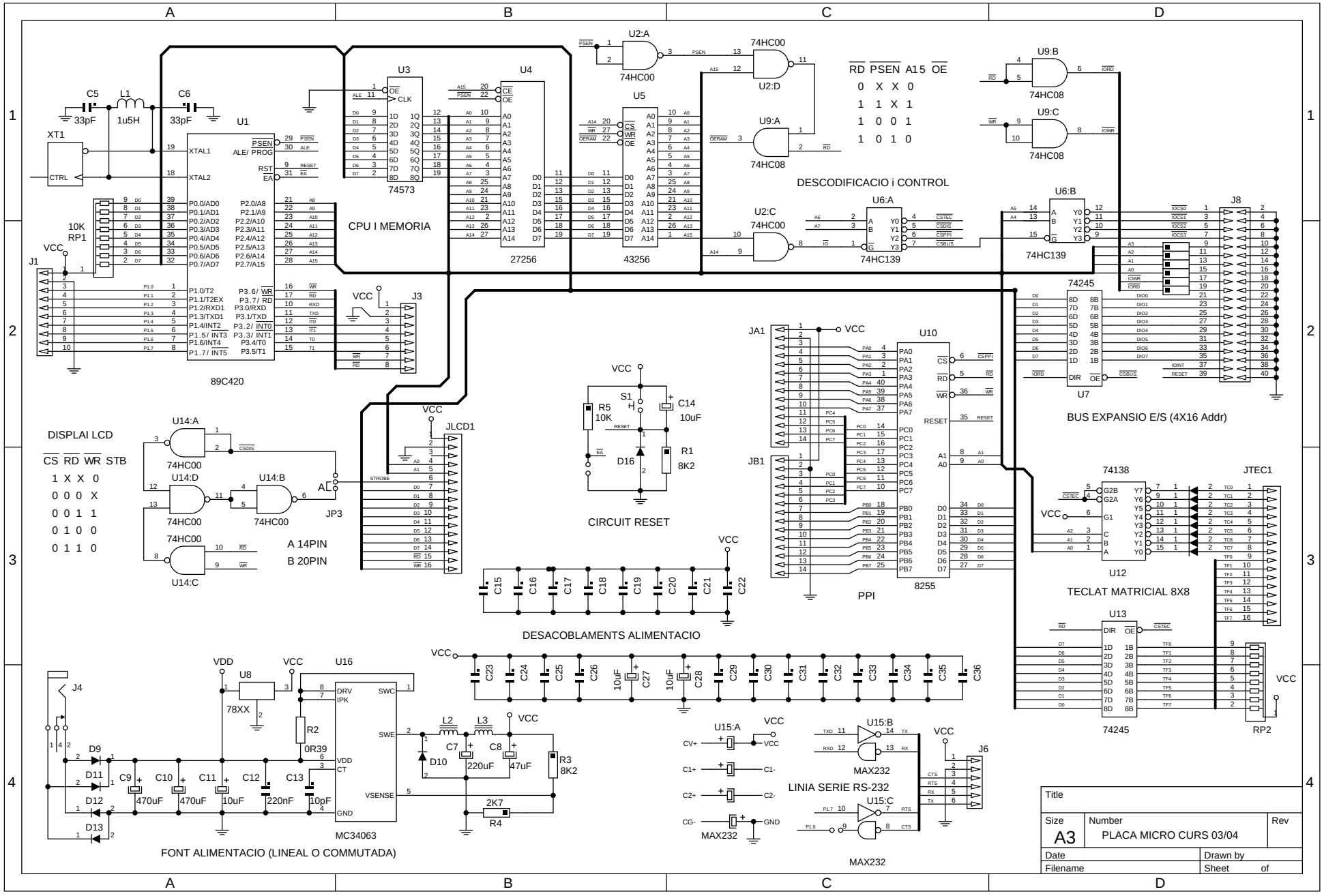
CPU I MEMORIA
89C420
74573
27256
43256
DESCODIFICACIO i CONTROL
RD PSEN A15 OE
0 X X 0
1 1 X 1
1 0 0 1
1 0 1 0
BUS EXPANSIO E/S (4X16 Addr)
74245
DISPLAI LCD
CS RD WR STB
1 X X 0
0 0 0 X
0 0 1 1
0 1 0 0
0 1 1 0
A 14PIN
B 20PIN
CIRCUIT RESET
PPI
8255
DESACOBLAMENTS ALIMENTACIO
TECLAT MATRICIAL 8X8
74138
JTEC1
RP2
FONT ALIMENTACIO (LINEAL O COMMUTADA)
MC34063
78XX
LINIA SERIE RS-232
MAX232
Title
Size
A3
Number
PLACA MICRO CURS 03/04
Rev
Date
Drawn by
Filename
Sheet
of